SUSPENSION

4411-01

GENERAL INFORMATION

1. SPECIFICATIONS

Description	Specification	
	Front Suspension	Rear Suspension
Suspension type	Double wishbone	Multi-link type
Spring type	Coil spring	Coil spring
Shock absorber type	Reciprocating cylindrical type (gas type)	Reciprocating cylindrical type (gas type)
Stabilizer bar type	Torsion bar type	Torsion bar type

2. WHEEL ALIGNMENT

Front Wheel Alignment	Toe-in	0.˚±0.10˚
	Camber	−0.12˚±0.50˚
	Caster	4.80˚±0.50˚
Rear Wheel Alignment	Toe-in	0.48˚±0.15˚
	Camber	−1.20˚±0.50˚
	Caster	-

Modification basis	
Application basis	
Affected VIN	

3. MAJOR CHANGES

4320-01	① Rear sub frame module

Old

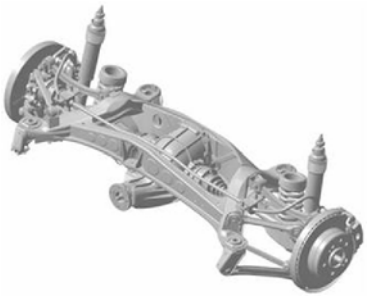

New

- Rear sub frame module changed
- Front stopper added

4331-06	④ Tension link

Old

New

- Apperance changed

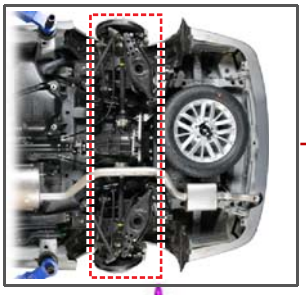

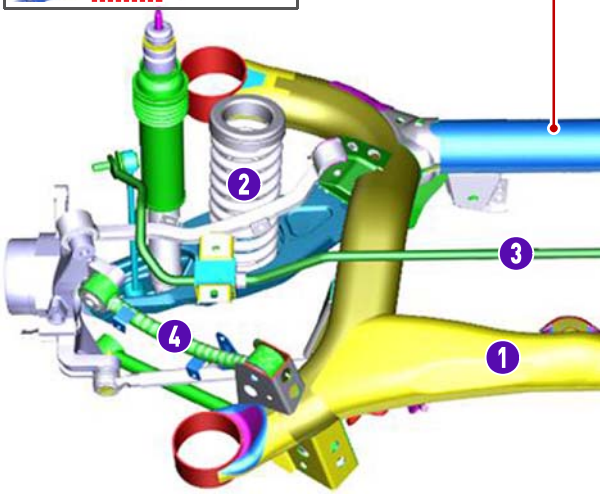

4331-01	② Camber link

Old

New

- Apperance changed

4510-10	③ Rear stabilizer bar assembly

Old

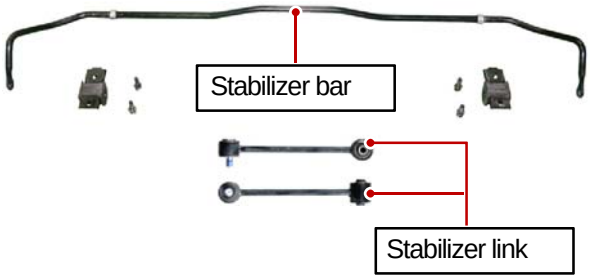

New

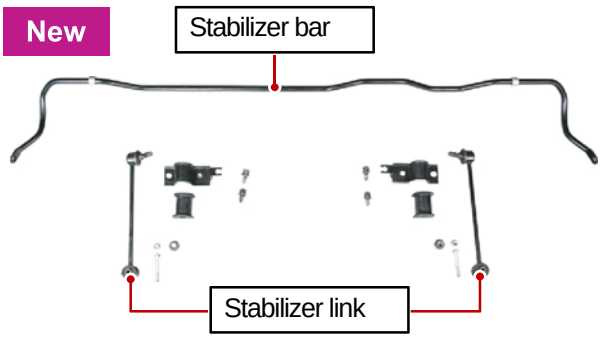

- Appearance and its link length changed

Modification basis	
Application basis	
Affected VIN	

4331-11	6	Thrust link

- Apperance changed

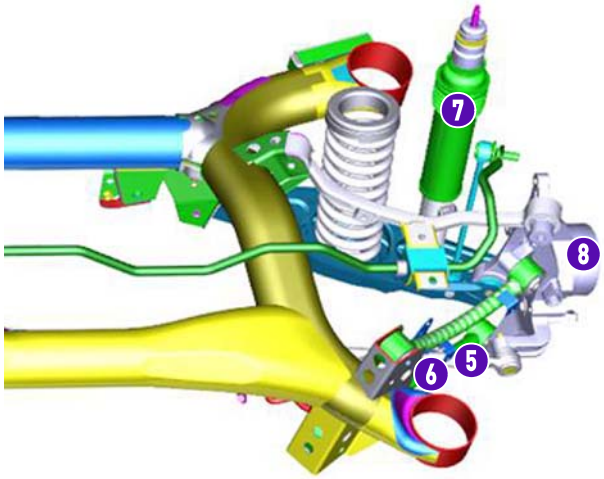

4511-01	7	Rear shock absorber assembly

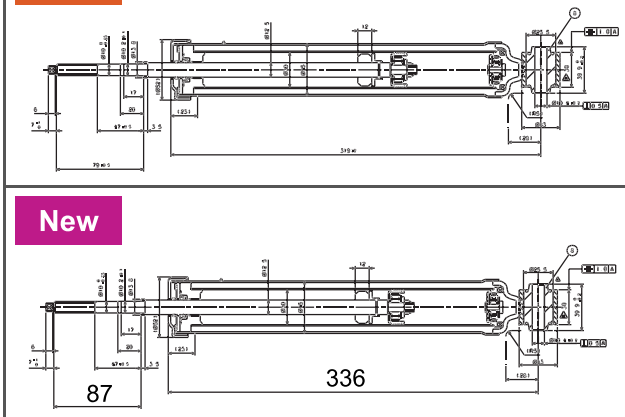

- Its operation length changed
  Max. operation length: 487 mm to 500 mm
  Min. operation length: 326 mm to 339.6 mm

4331-07	5	Track rod

- Appearance changed

4221-01	8	Wheel carrier assembly

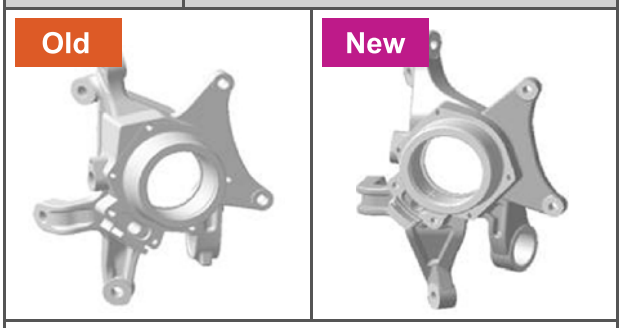

- Appearance changed

Modification basis	
Application basis	
Affected VIN	

OVERVIEW AND OPERATING PROCESS

1. OVERVIEW

Suspension is the term given to the system of springs, shock absorbers and linkages that connects a vehicle to its wheels and allows relative motion between the two. Suspension systems serve a dual purpose - contributing to the vehicle's road-holding/handling and braking for good active safety and driving pleasure, and keeping vehicle occupants comfortable and reasonably well isolated from road noise, bumps, and vibrations, etc. These goals are generally at odds, so the tuning of suspensions involves finding the right compromise. It is important for the suspension to keep the road wheel in contact with the road surface as much as possible, because all the forces acting on the vehicle do so through the contact patches of the tires. The suspension also protects the vehicle itself and any cargo or luggage from damage and wear.

1) Front Suspension (Double Wishbone)

Double wishbone suspension is an independent suspension design using two (occasionally parallel) wishbone-shaped arms to locate the wheel. Each wishbone or arm has two mounting points to the chassis and one joint at the knuckle. The shock absorber and coil spring mount to the wishbones to control vertical movement. Double wishbone designs allow the engineer to carefully control the motion of the wheel throughout suspension travel, controlling such parameters as camber angle, caster angle, toe pattern, roll center height, scrub radius, scuff and more.

2) Rear Suspension (Multi Link Type)

The multi-link type is used for the rear suspension to distribute the internal force (load) applied to the link while driving. Also, the change in camber or toe and shock load from the road has been minimized by optimizing the link arrangement.

Modification basis	
Application basis	
Affected VIN	

Memo

2. COMPONENTS

1) Front Suspension (Double Wishbone)

Upper Arm

The upper arm is mounted to the frame and the knuckle and it relieves the load delivered from the tire to the knuckle. This enables to absorb the various impacts according to the load shapes and to ensure the drivability.

Knuckle

There are two types of knuckle (4WD, 2WD)

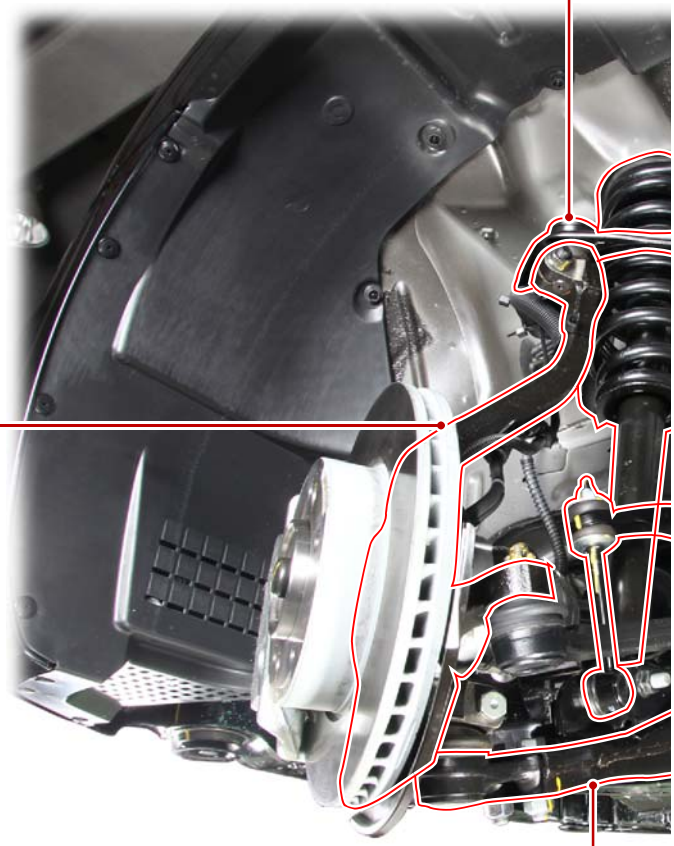

Lower Arm

Cam bolt

The lower arm is mounted to the knuckle, the shock absorber and the lower arm assembly. It relieves the load delivered from the tire to the knuckle. This enables to absorb the various impacts according to the load shapes and to ensure the drivability.

Modification basis	
Application basis	
Affected VIN	

Shock Absorber Assembly

- **Coil spring**

The shock absorber assembly reduces the effect of traveling over rough ground, leading to improved ride quality and increases in comfort. While shock absorber serves the purpose of limiting excessive suspension movement, their intended sole purpose is to dampen spring oscillations. The shock absorber in this vehicle uses the gas to absorb excess energy from the spring.

- **Shock absorber**

1. Keep the clearance to drive shaft.
2. To prevent the transverse force to shock absorber, the upper center line and the lower center line of shock absorber are placed on same line.

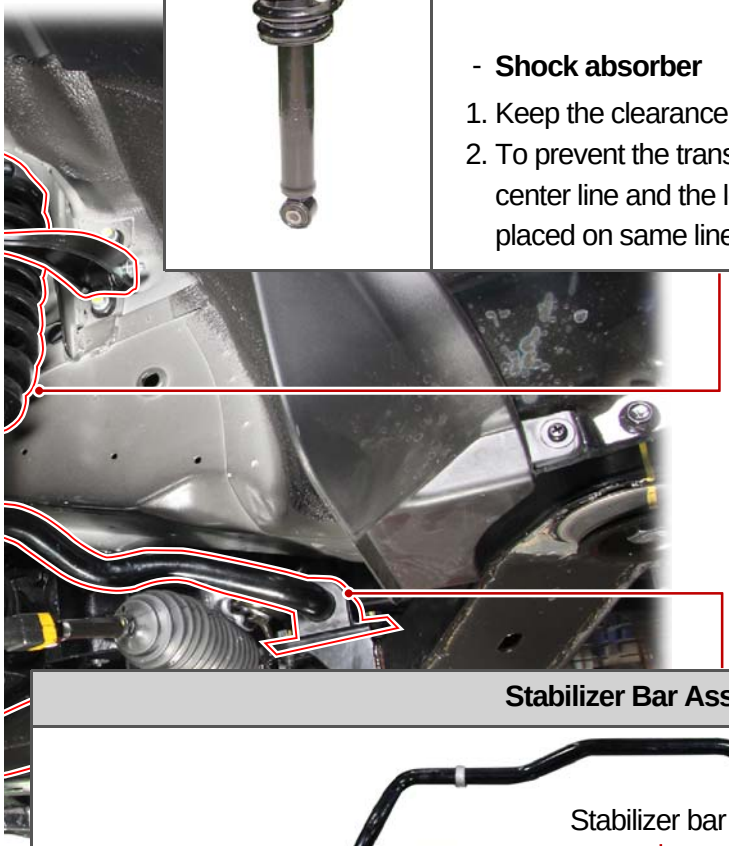

Stabilizer Bar Assembly

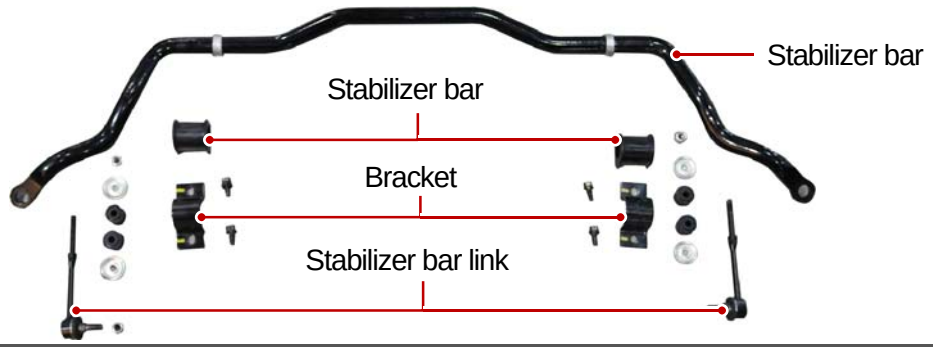

The stabilizer bar is intended to force each side of the vehicle to lower, or rise, to similar heights, to reduce the sideways tilting (roll) of the vehicle on curves, sharp corners, or large bumps. The basic function is to force the opposite wheel's shock absorber, spring or suspension rod to lower, or rise, to a similar level as the other wheel. In a fast turn, a vehicle tends to drop closer onto the outer wheels, and the sway bar will soon force the opposite wheel to also get closer to the vehicle. As a result, the vehicle tends to "hug" the road, closer in a fast turn, where all wheels are closer to the body. After the fast turn, then the downward pressure is reduced, and the paired wheels can return to their normal height against the vehicle, kept at similar levels by the connecting stabilizer bar.

Modification basis	
Application basis	
Affected VIN	

2) Rear Suspension

Spring link	Wheel carrier assembly	Rear coil spring

Rear sub frame bush

Front

Rear

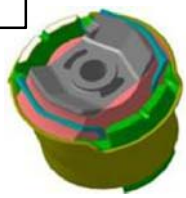

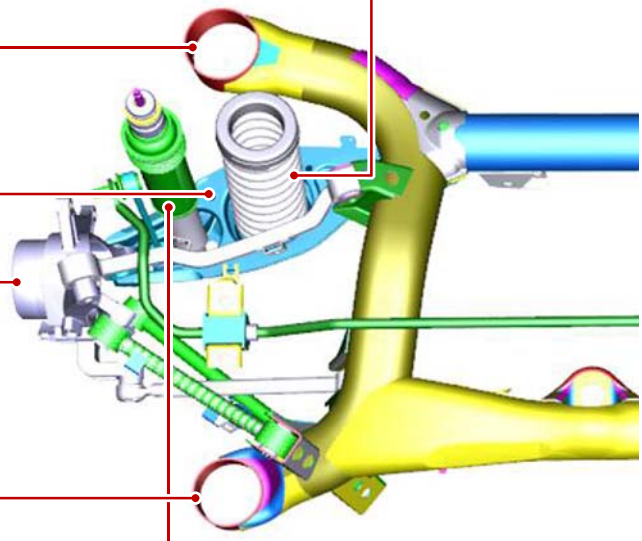

Rear shock absorber assembly

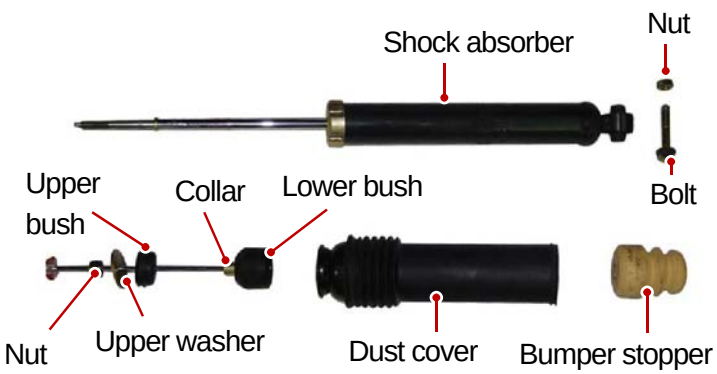

Modification basis	
Application basis	
Affected VIN	

Thrust link

Tension link

Camber link

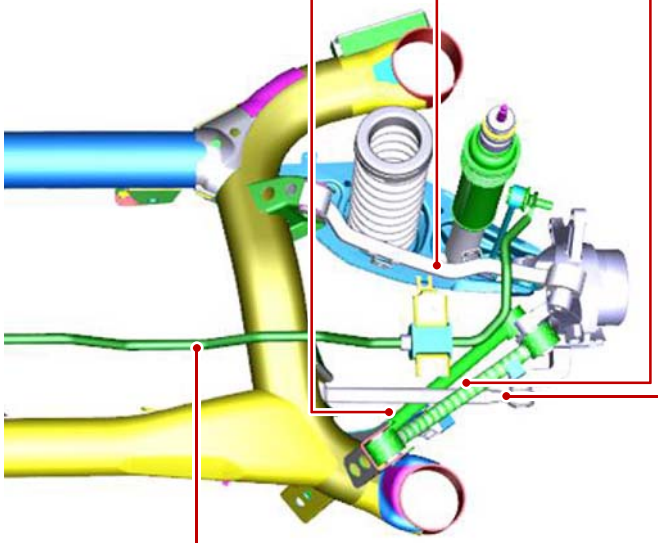

Track rod

Rear stabilizer bar assembly

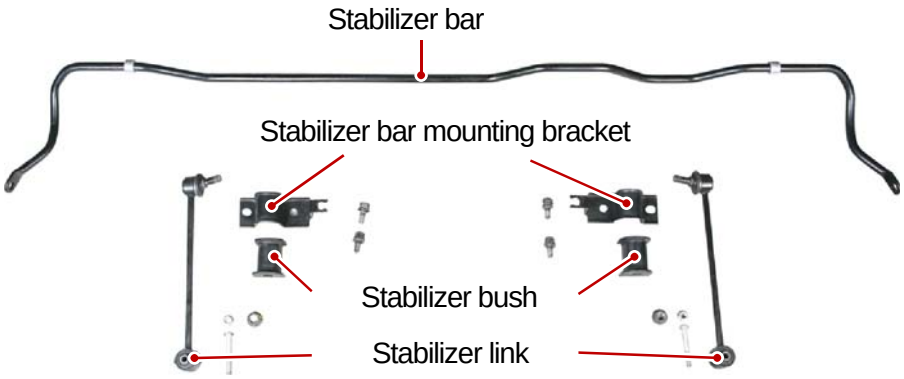

Modification basis	
Application basis	
Affected VIN	

3. WHEEL ALIGNMENT

Wheel alignment (adjustment of Camber, Caster and Toe) is part of standard automobile maintenance that consists of adjusting the angles of the wheels so that they are set to the specification. The purpose of these adjustments is to reduce tire wear, and to ensure that vehicle travel is straight and true (without "pulling" to one side). Alignment angles can also be altered beyond the specifications to obtain a specific handling characteristic.

▶ **Necessity for Wheel Alignment**

Wheel alignment consists of adjusting the angles of the wheels so that they are perpendicular to the ground and parallel to each other. The purpose of these adjustments is maximum tire life and a vehicle that tracks straight and true when driving along a straight and level road.
The symptoms of a vehicle that is out of alignment are:
Uneven or rapid tire wear
Pulling or drifting away from a straight line
Wandering on a straight level road
Spokes of the steering wheel off to one side while driving on a straight and level road.

1) Toe-in

The difference of measured distances between the front ends of the tires (A) and the rear ends of the tires (B) along the same axle when viewed the wheels from the top.

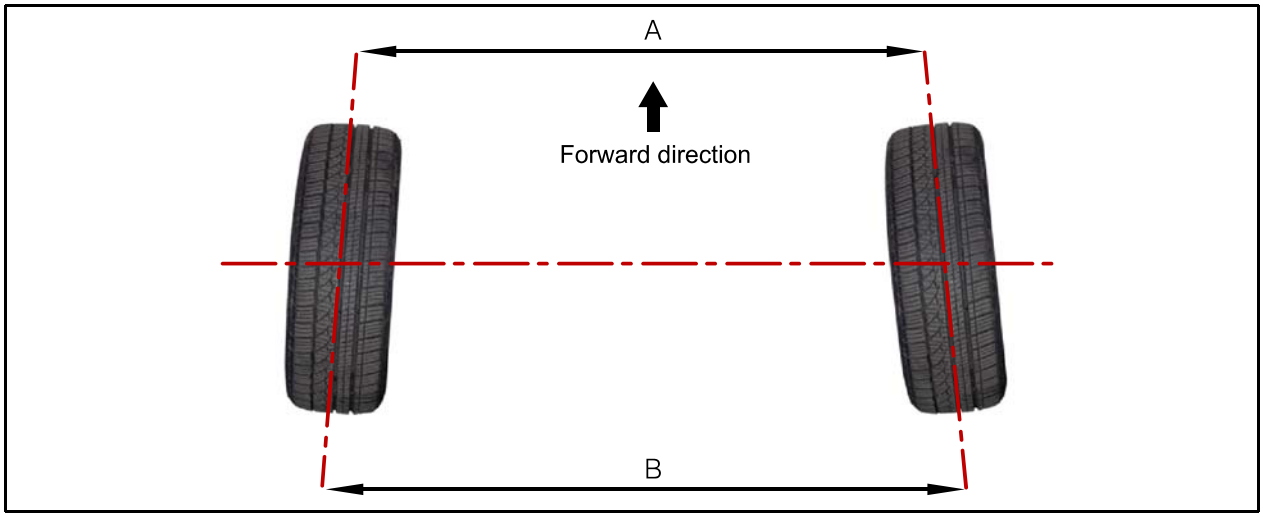

Toe-in	Front	0.˚±0.10˚
	Rear	0.48˚±0.15˚

▶ **When viewed from the top, the distance between the tire centers is smaller in the front than in the rear.**

- Side slip protection
- Parallel front wheels rotation (straight ahead driving is ensured by toe-in to prevent the wheels from tilting outwards by the camber while driving)
- Prevention of uneven (outward) tire wear Prevention of toe-out from wearing of steering linkage

Modification basis	
Application basis	
Affected VIN	

2) Camber

The angle between the center line of the tire and the vertical line when viewed from the front of the vehicle

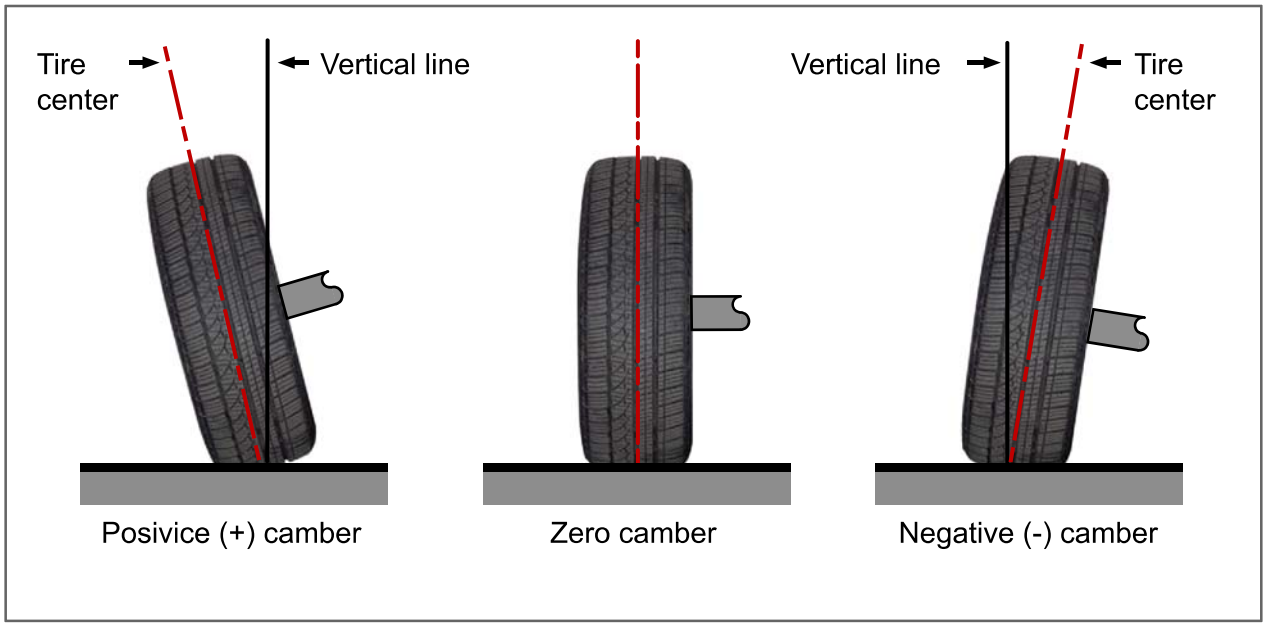

Camber	Front	−0.12˚±0.50˚
	Rear	−1.20˚±0.50˚

▶ **Positive camber: Top of the tire is tilted outward**

Advantages:
- The axle is not bent when it is loaded.
- The force required to operate the steering wheel is reduced due to smaller contact area (or load area) of the tire.
- Restoring force of the steering wheel is gained (when turning the steering wheel, the tire circles and the force to lift the frame is applied. In this case, the shock absorber contracts and the restoration force is applied to the steering wheel.)

Disadvantages:
- Cornering force decreases as the positive camber increases when the vehicle makes turn.
- The hub bearing is worn unevenly if camber is excessive.

▶ **Zero camber: When the tire center line is perpendicular to the ground level**

▶ **Negative camber**

Advantages:
- Better traction force due to wide load area (applicable for off-road vehicle)
- Better corner driving when the vehicle makes turn as the cornering force

Disadvantages:
- The axle is easy to be bent or deviated in the negative camber than in the positive camber when load is applied on the axle.
- Difficult to control due to wide load area.

3) Caster

The angle between the vertical line and king pin, which fixes the steering knuckle and front axle, (steering column which connects the top and bottom ball joints in the independent axle type) when viewed the tires from the side.

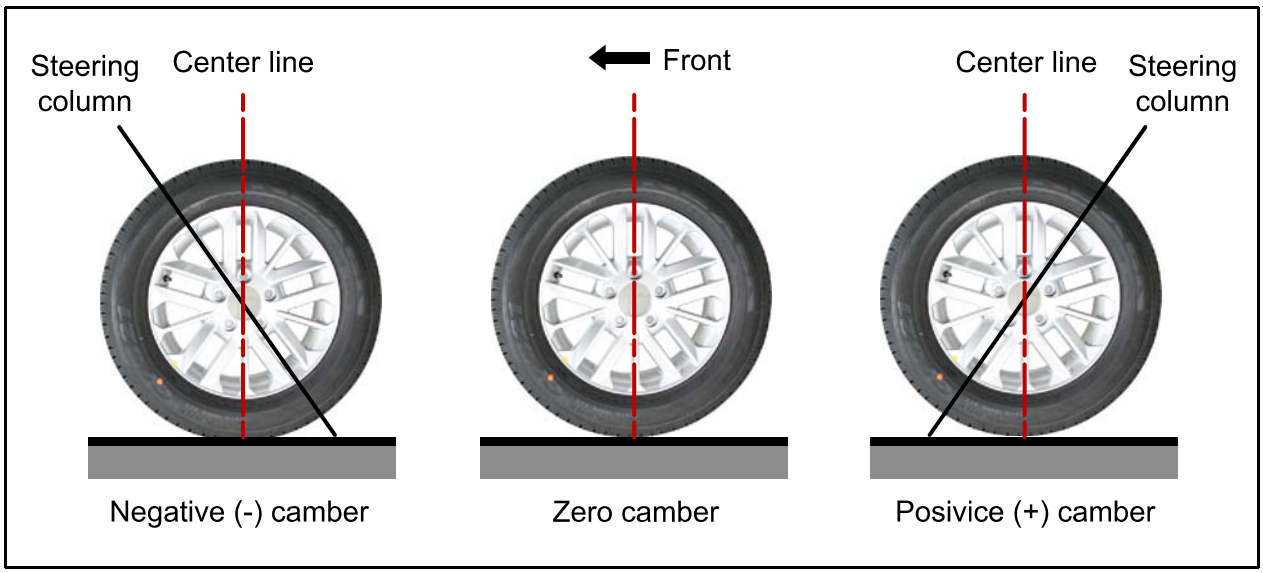

Caster	Front	4.80˚±0.50˚
	Rear	-

▶ **Caster:** With considering the height difference between the wheel centers of the front and rear wheels. (Under standard condition that the vehicle is on a level ground)

▶ **Positive caster:** Top of the king pin is tilted backward from the vertical line of the wheel center when viewed the tires from the side

Advantages:
- Directional force to go straight (following control)
- Restoring force of the wheel (restored to the straight ahead direction)
- Prevention of wheel shimmy (wheels wobble left and right)

▶ **Negative caster:** Top of the king pin is tilted forward from the vertical line of the wheel center when viewed the tires from the side

Advantages:
- Smaller turning radius

Disadvantages:
- Impact from the road is transferred to the steering wheel (steering wheel turns) Poor straightness
-

Modification basis	
Application basis	
Affected VIN	