# AXLE

4120-01

## GENERAL INFORMATION

## 1. SPECIFICATIONS

### ▶ Front Axle

| Description | | Specification |
|---|---|---|
| Drive shaft type | | CV joint |
| Axle housing type | | Build up |
| Differential | Type | Conventional type |
| | Gear type | Hypoid Gear |
| Final gear reduction ratio | Engine + M/T | 4.55 |
| | Engine + A/T | 3.54 |
| Oil | Capacity | 1.2 L |
| | Specification | SAE 80W / 90, API GL-5 |

### ▶ Rear Axle

| Description | | Specification |
|---|---|---|
| Axle shaft type | | Semi-floating |
| Axle housing type | | Build up |
| Differential | Type | Conventional type |
| | Gear type | Hypoid Gear |
| Final gear reduction ratio | Engine + M/T | 4.55 |
| | Engine + A/T | 3.54 |
| Oil | Capacity | 1.5 L |
| | Specification | TOTAL-ISU EP-B 85W/90 |

# 2. CHANGES

▶ **Changes in rear axle assembly**

| Rear axle assembly | |
|---|---|
| Old 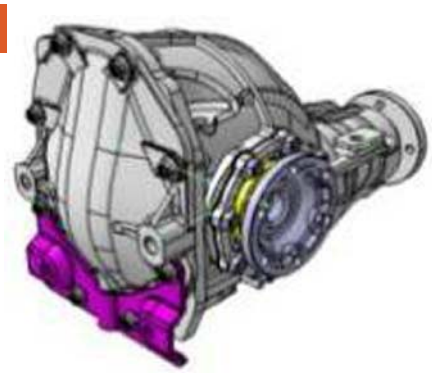 | New 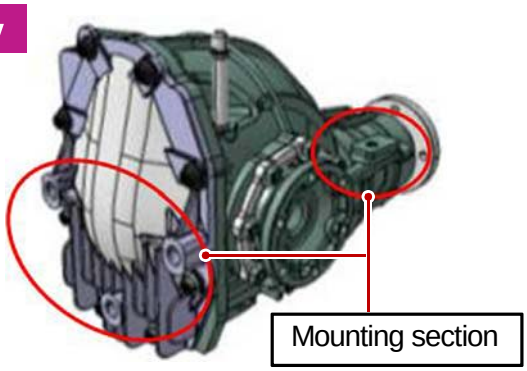  |
| Mounting hole position and seat pan angle for rear axle changed due to change of rear sub frame | |

▶ **Changes in rear axle shaft assembly**

| Rear Axle Shaft Assembly |
|---|
|  |
| Increased rear axle shaft length (15.0 mm) due to change of rear sub frame |



| | |
|---|---|
| Modification basis | |
| Application basis | |
| Affected VIN | |

# OVERVIEW AND OPERATING PROCESS

## 1. OVERVIEW

The axle is the device of transferring the drive power from the engine to the wheels; its inside is fitted to the side gear spline of the differential gear and outside is connected to the drive wheels. The axles in front and rear of vehicle are known as the front axle and rear axle respectively.
For the FR (Front engine, Rear wheel drive) type vehicle driven by the rear wheels, the drive power is basically transferred to the rear wheels in the following order in 2WD mode: Engine->Clutch→Transmission→Propeller shaft (Rear propeller shaft)→Final reduction gear (Rear axle)→Rear axle shaft→Rear wheels. In 4WD mode, the drive power to the rear wheels is distributed to the front wheels in order of Front propeller shaft->Front axle->Front axle shaft->Front wheel via the T/C assembly. And, 4WD solenoid valve releases the vacuum and engage the locking hub actuator to the LH/RH front hub end gear to transfer the drive power of the axle shaft to the front wheels.
The front axle and front axle shaft are used in only 4WD model. The rear axle has the independent rear drive axle (IRDA) which is used on the independent rear suspension (IRS).

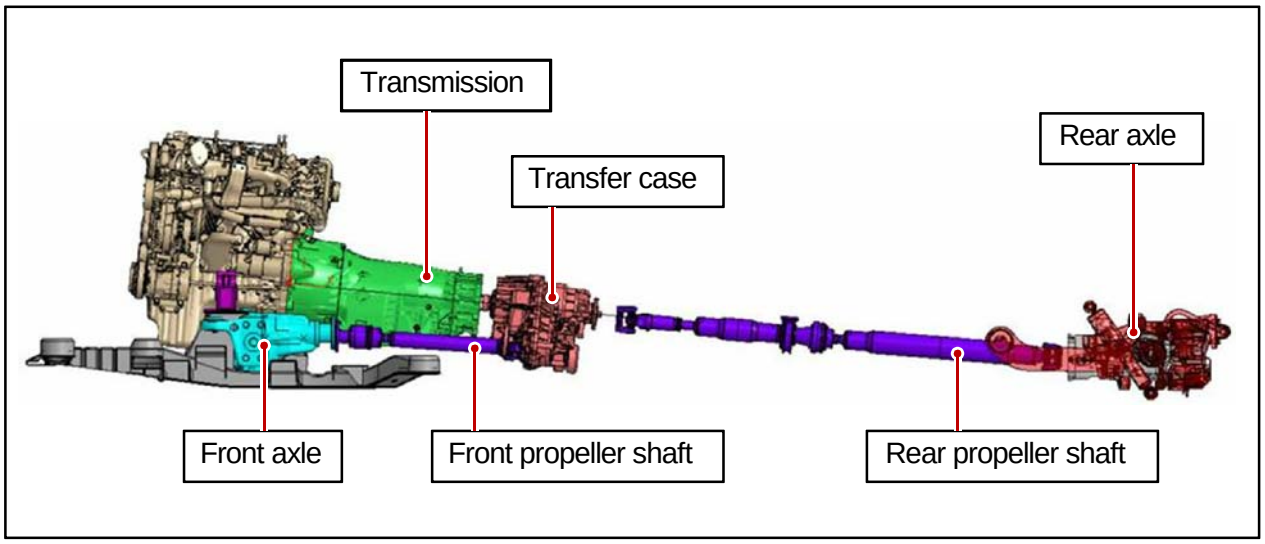

# 2. Power Flow

### ▶ Power Transfer Process in Axle System at 4WD and 2WD Modes

The vehicle is usually driving in 2WD mode but, if the driver operates, the drive power is distributed to the front wheels rather than rear wheels via the transfer case only in 4WD mode in following order: Front propeller shaft->Front axle->Front axle shaft->Front wheel.

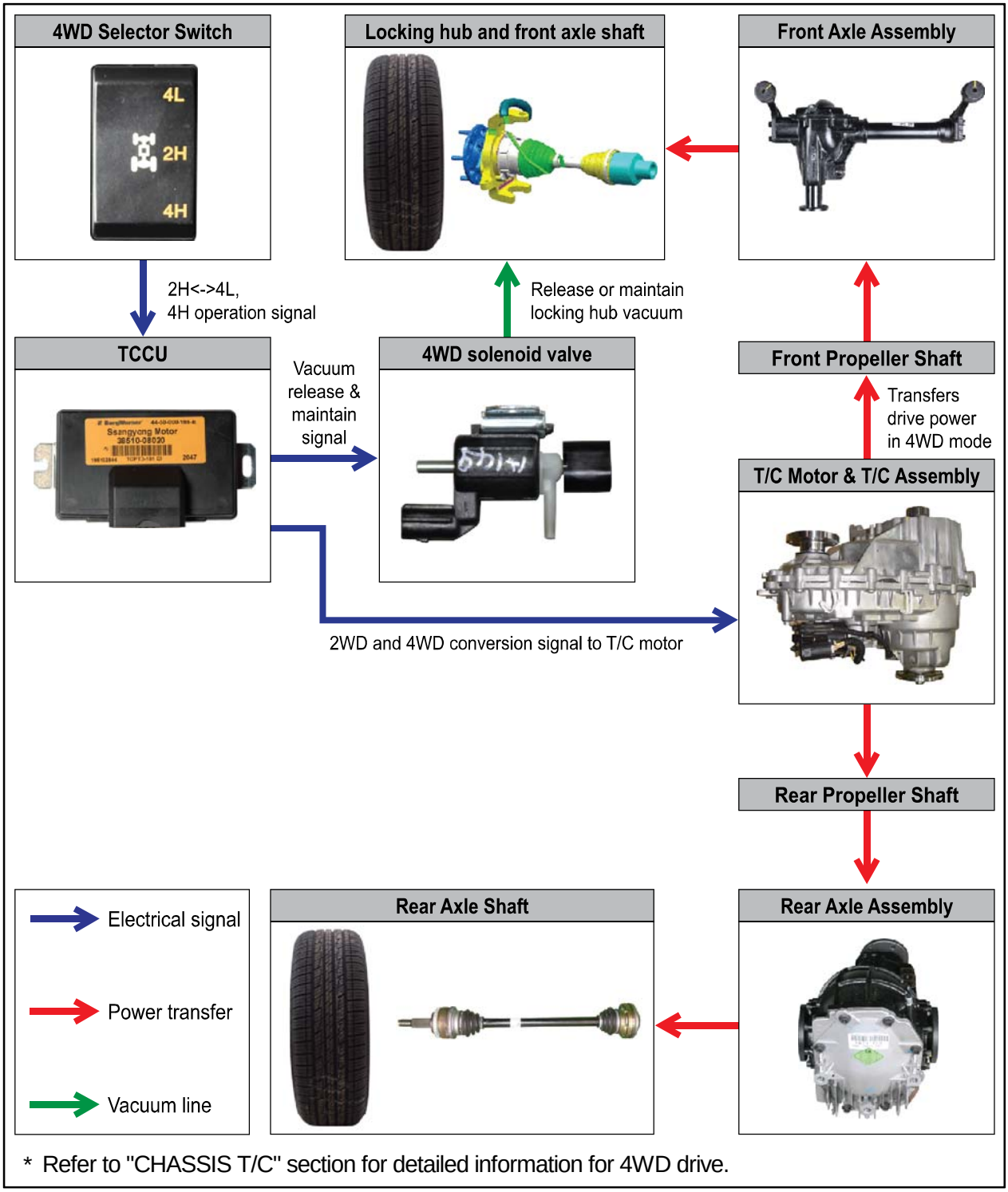


* Refer to "CHASSIS T/C" section for detailed information for 4WD drive.



| | |
|---|---|
| Modification basis | |
| Application basis | |
| Affected VIN | |