CDPF SYSTEM

2412-02

GENERAL INFORMATION

1. CAUTIONS

1) Standard pattern of soot accumulation

▶ **Abnormal Soot Accumulation**

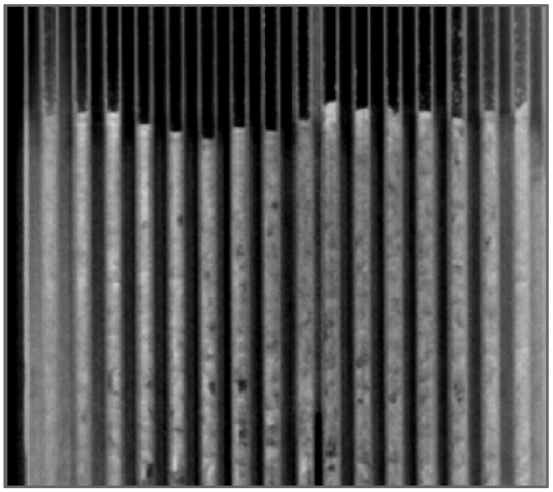

▶ **Normal Soot Combustion**

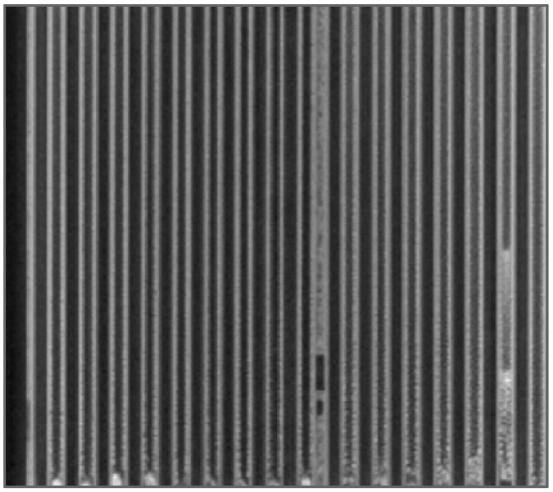

▶ **Cautions to protect the catalyst filter**

- Use the designated fuel only.
- Observe the recommended service intervals of engine oil.
- Check the engine oil level frequently and add if necessary.
- Do not idle the vehicle unnecessarily.
- Do not turn off the engine while the vehicle is running.
- Do not shift the gear selector lever to neutral when going downhill.
- Do not use improper engine oil or fuel additives.
- Do not drive for a long time when the warning lamp is illuminated.
- Make sure no flammable material, such as dry grass or tissue paper, contacts with the catalyst filter while the vehicle is parked.
- For the vehicles used in urban traffic, driving on the expressways for more than 1 hour at least once per week is needed so that the PM inside CDPF isn't collected to one side only.

Modification basis	
Application basis	
Affected VIN	

2) Designated Engine Oil for CDPF (Low Ash Oil)

1. Need to use the designated engine oil for CDPF

   - The smoke from the vehicle may generate the particle material in the ambient air. CDPF is the device to reduce the smoke by collecting and recycling it. To ensure the performance of CDPF, the designated engine oil should be used.
   - The smoke including combusted sulfur in fuel cannot be recycled in CDPF. This smoke generates the ash, resulting in clogging the filter.

2. Advantages when using the designated engine oil for CDPF

   - Reduces the amount of ash
   - Improves the fuel economy and reduces the CO2
   - Increases the life span of engine oil
   - Available for all engines (diesel and gasoline)

3. Problems when using non-designated engine oil for CDPF

   - Decreases the life span of engine oil due to accumulated ash in DPF (around 30%)
   - Decreases the fuel economy due to friction resistance, exhaust gas resistance and frequent recycling process of DPF

CAUTION

The fuel containing high sulfur may cause the same problems.

Modification basis	
Application basis	
Affected VIN	

3) Do Not Use the Fuel Containing High Sulfur

1. Producing white smoke during recycling
   - The sulfur in exhaust gas is changed to sulfate gas during exhaust process. This sulfate gas is shown as white smoke.
2. Producing odor during recycling
   - The sulfur after oxidation may produce the odor.
3. Accumulation of ash
   - The sulfur accumulated in DPF cannot be recycled. It reduces the life span of DPF.

4) White Smoke

The white smoke can be generated when the exhaust gas is recycled in DPF. There are two reasons as below.

1. Saturated vapor
2. Sulfate

CAUTION

- The vehicle equipped with CDPF system may generate the white smoke when using the fuel with high sulfur content (over 100 ppm). This is caused by the sulfur attached and accumulated in CDPF. However, this is very natural situation, not caused by your vehicle.
- How to fix the problem
  Replace current fuel with high grade fuel as soon as possible. How-ever, even after replacing the fuel, the white smoke may be seen due to residual sulfur in CDPF system.

Modification basis	
Application basis	
Affected VIN	

5) Warning Lamp Related to CDPF

▶ **CDPF regeneration process (warning lamp NOT illuminated)**

The CDPF system enters the regeneration mode when the driving distance becomes approx. 600 to 1,200 km (may differ by the driving condition and driving style). Then, the engine ECU performs the CDPF regeneration operation. However, the driver is not informed with this operation by any engine warning lamp or vehicle signal, so he/she may not detect this operation. The control logic at the post-injection dur-ing the regeneration process is to increase the fuel injection volume and control the intake air volume (by the throttle body) in order to increase the temperature of the exhaust gas. The driver may not feel any particular difference from the vehicle.

Overload of CDPF (warning lamp blinking)		Excessive overload of CDPF (warning lamp illuminated)	
 Blinking	 Blinking	 Illuminating	 Illuminating
1. If the CDPF cannot reach the regeneration temperature due to low speed driving or other reason during the regeneration process, the soot is continuously accumulated in the CDPF. When this condition continues and the CDPF is overloaded with soot, the engine warning lamp blinks to inform this situation to the driver. In order to solve this problem, drive the vehicle at a speed of approx. 80 km/h for 15 to 20 minutes to 2. perform the CDPF regeneration process. If the engine warning lamp on the instrument cluster blinks, the CDPF is overloaded. In this case, perform the step 2. 3.		1. If the vehicle is driven at a speed of 5 to 10 km/h for an extended period of time, the soot accumulated in the CDPF cannot be burned as the CDPF cannot reach the regeneration temperature. Then, an excessive amount of soot can be accumulated in the CDPF. This case is much worse than the simple over-load 2. of the CDPF. To inform this to the driver, the engine warning lamp comes on and the engine power is decreased to protect the system. To solve this problem, blow soot between the engine and exhaust system several times and 3. erase the related DTC. Then, check if the same DTC is regenerated again. If so, check the DTC related to the differential pressure sensor.	

Modification basis	
Application basis	
Affected VIN	

OVERVIEW AND OPERATING PROCESS

1. OVERVIEW

The low emission vehicle is being sold increasingly in the market as a countermeasure for complying with the environment regulations such as a special act on Seoul metropolitan air quality improvement and for reducing the PM (Particulate Material) from the diesel-powered vehicle. For the CDPF system, the DOC (two-way catalytic converter or catalytic combustion system) fitted to the conventional diesel engine has the high purification rate for HC or CO but not have a high reduction rate for the PM. For this reason, a necessity has been raised in order to consider a countermeasure to reduce the PM since the existing DOC can't meet the regulation, which is getting tighter.
This results in a development of the CDPF (Catalyst & Diesel Particulate Filter) that is combination of the existing DOC (Diesel Oxydation Catalyst) and DPF (Diesel Particulate Filter). While the DOC converts the CO and HC into the CO2 and H2O - unharmful to human body - using a oxidation reaction, the DPF collects the PF (Particulate Material) for regeneration of it. However, each of these devices can only reduce a part of the exhaust gas. This evoked the necessity of the CDPF with both features. The DOC capacity is more on the manual transmission than the automatic transmission.

▶ DOC(Diesel Oxidation Catalyst)

It is called as a oxidation catalyst, which purifies CO and HC in exhaust gas. The three-way catalyst is used for the gasoline vehicle. But, the diesel engine oxidates CO and HC excepting NOx into H2O and CO2 in order to purify the exhaust gas since the exhaust gas has a rich oxygen at all times.

▶ DPF(Diesel Particulate Filter)

It consists of mainly the aluminum and titanium and there is a porous thin film, which emits the exhaust gas but does not emit the PM in it. It emits the exhaust gas generated during combustion and filters the PM which is a byproduct of combustion to burn it when a certain amount of it is collected in the filter. When a certain amount of the PM builds up, exposure to high exhaust gas causes carbon, the fundamental ingredient in PM, to burn and release into the atmosphere in form of CO2.

Modification basis	
Application basis	
Affected VIN	

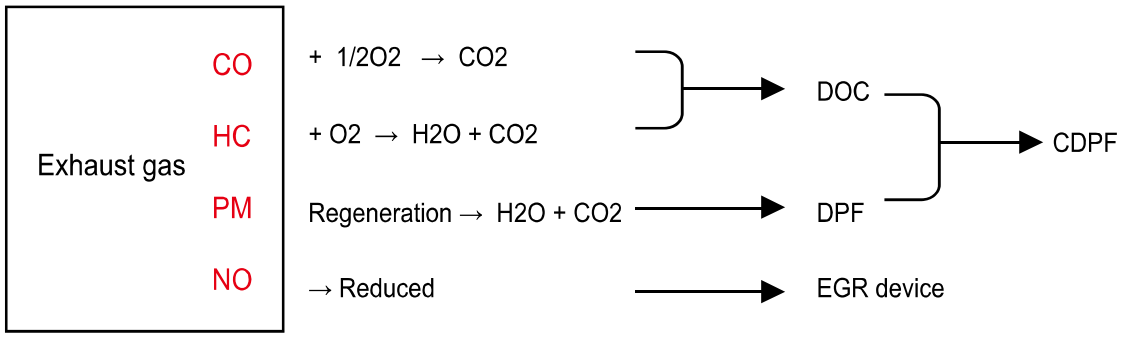

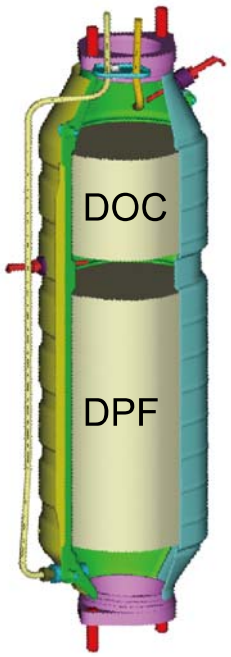

DOC [Diesel Oxidation Catalyst]
CO + 1/2O2 -Oxidation → CO2
HC + O2 -Oxidation → H2O + CO2

DPF [Diesel Particulate Filter]
Collecting PM → Regeneration → H2O + CO2

CDPF [Catalyst & Diesel Particulate Filter]

Modification basis	
Application basis	
Affected VIN	

2. COMPONENTS

CDPF (DOC+DPF)

Front EGT Sensor

Measures the combustion temperature.

Electric Throttle Body

Regulates the air intake rate.

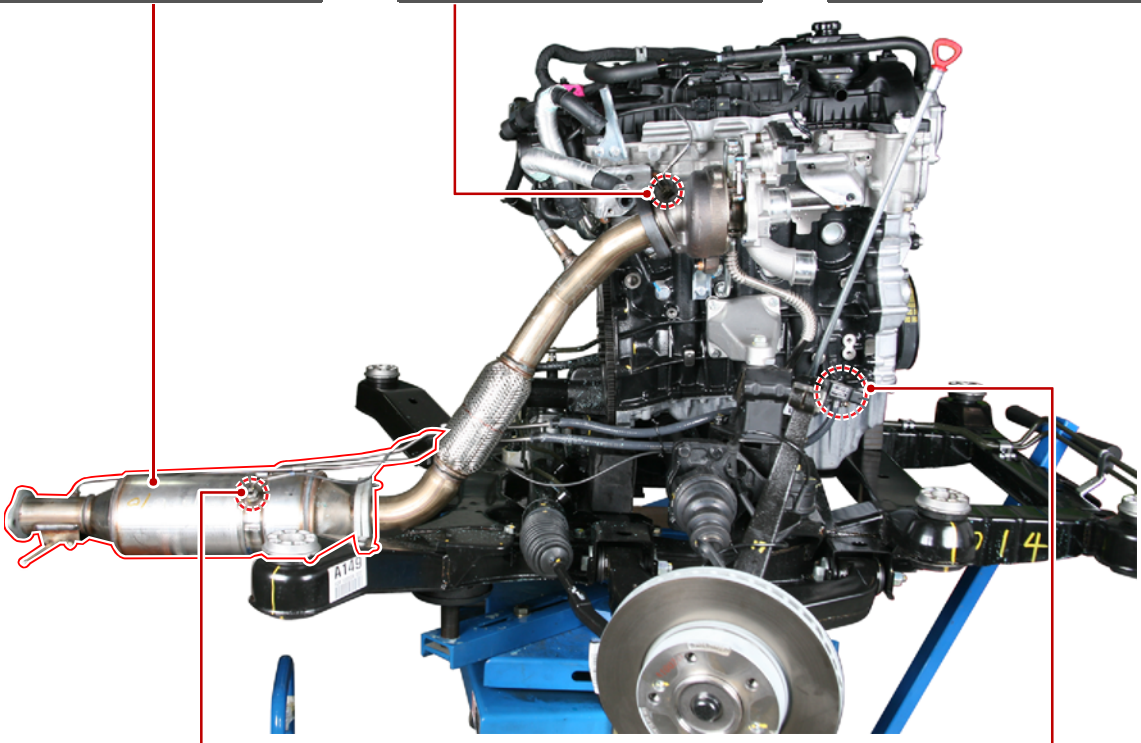

Rear EGT Sensor

Measures the CDPF temperature.

Engine ECU (D20DTR)

Post injection

Differential Pressure Sensor

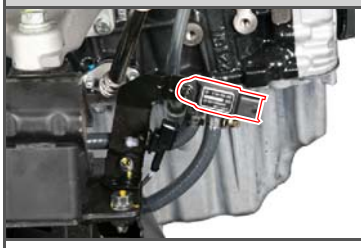

Calculates the amount of PM collected by reading the pressure difference between pre-CDPF and post-CDPF.

* For details, refer to section "Engine Control".

Modification basis	
Application basis	
Affected VIN	

3. INPUT/OUTPUT DEVICES

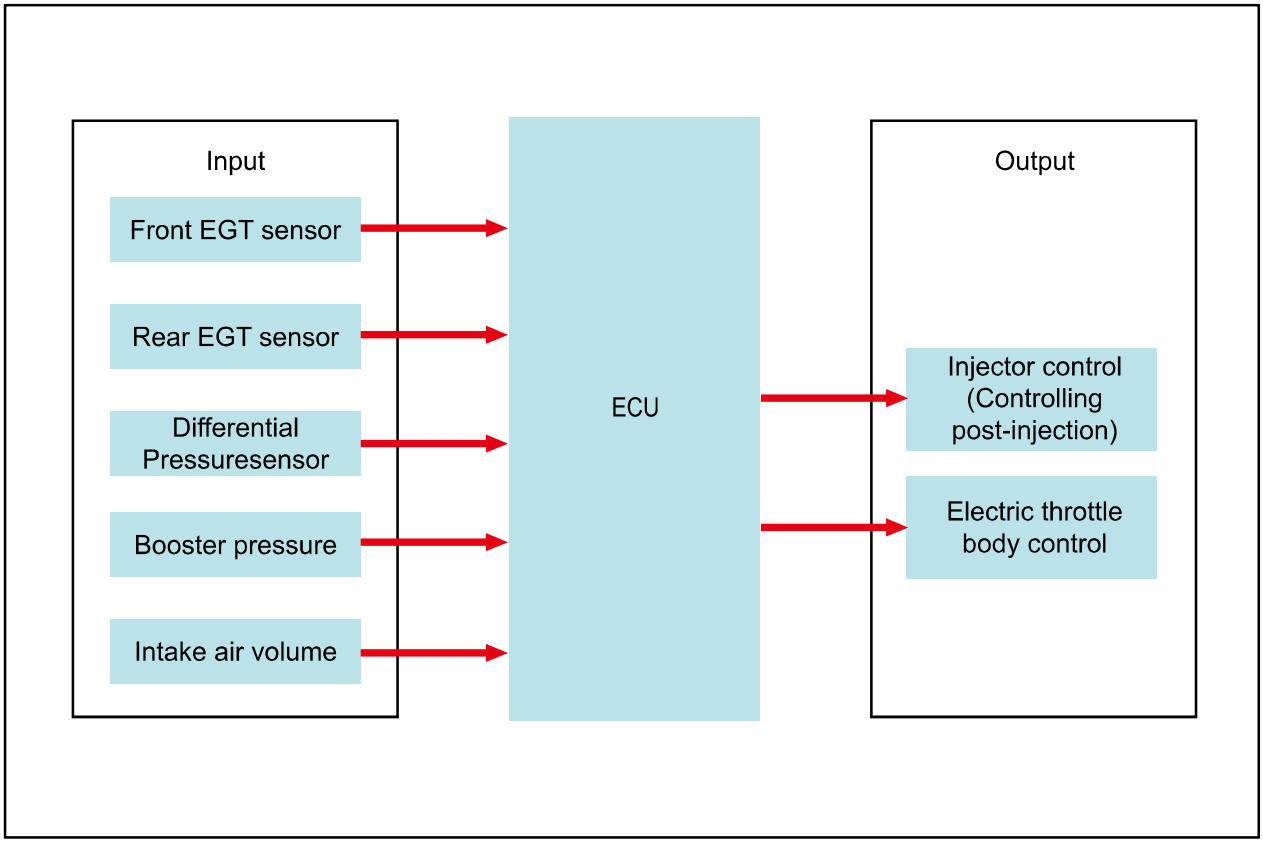

1. Front temperature sensor: This sensor is installed at the inlet of DOC and detects whether the DOC can burn (oxidize) the post-injected fuel or not.
2. Rear temperature sensor: This sensor is installed at the inlet of DPF and monitors that the temperature of the exhaust gas is kept at 600℃.

- If the temperature exceeds 600℃, the life of CDPF can be reduced. So the amount of fuel post-injection is decreased.
- If the temperature drops under 600℃, the rate of regeneration can be decreased. So the amount of fuel post-injection is increased.

3. Differential pressure sensor: This sensor checks the amount of PM collected by calculating the
4. pressure difference between before and after the CDPF.
   Electric throttle valve: This valve reduces the intake air flow to raise the temperature of the exhaust gas when the CDPF is operating during idling.

Modification basis	
Application basis	
Affected VIN	

4. POST-INJECTION AND AIR MASS CONTROL

A DPS (Differential Pressure Sensor) measures the pressure difference between before and after the CDPF and detects whether the soot is collected in the CDPF or not. If PM is collected in the CDPF (In this case the pressure difference between before and after the CDPF exceeds the specified value. Normally, the system sends the signal when the driving distance becomes approx. 600 to 1,200 km), the temperature of exhaust gas is increased and the post-injection is started for regeneration. The amount of fuel post-injection is controlled by the exhaust gas temperature measured by the rear temperature sensor. If the temperature is less than 600℃, the amount of post-injection is increased to increase the regeneration temperature. Otherwise, the fuel injection amount is decreased or the fuel is not injected.

When the engine is running with low load, the intake air amount is also controlled as well as fuel injection amount. This function is used to increaser the combustion temperature by increasing the amount of fuel post-injection with the lowest air amount within the specified control logic.

Front temperature sensor

Measures the temperature of exhaust gas.

This sensor is located at the rear side of exhaust manifold and monitors the temperature of combusted gas to prevent the exhaust system from overheating. When the temperature gets higher, this sensor cuts off the fuel delivery and controls the EGR to lower the temperature.

Differential pressure sensor

Measures the difference between inlet and outlet pressures of CDPF.

If the difference is higher than the specified value when collecting the PM, this makes the post injection for forced recycling of PM.

HFM sensor

Intake air mass

Engine ECU (D20DTR)

Measures the excessive amount of PM.

Wide band oxygen sensor

Boost pressure/ temperature

T-MAP sensor

Rear temperature sensor

Measure the outlet temperature of DOC.

This sensor is located at the rear side of DOC and monitors the overheating of CDPF and post injection volume.

Injector (C31)

Controls the post injection.

Electric throttle body

Controls the intake air mass.

Modification basis	
Application basis	
Affected VIN	

5. OPERATING PROCESS

[Configuration and principle of operation]

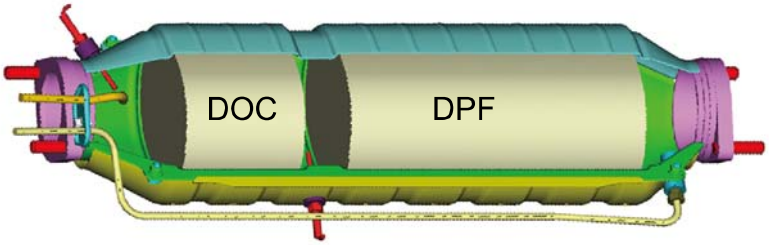

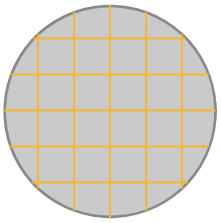

The exhaust gas passed through the exhaust manifold enters into the CDPF assembly (at approx 250℃).

Oxidation (DOC)	Collecting PM → Regeneration
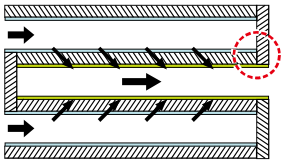	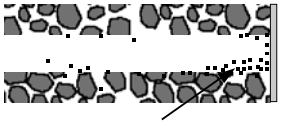
When the exhaust gas enters into the CDPF assembly, its CO, HC and PM are reduced by the redox reaction of the DOC. The remaining PM is filtered and collected in CDPF, and the temperature of the exhaust gas is increased to between 450 and 500°C.	The engine ECU detects the amount of PM collected by the information from the temperature sensors and differential pressure sensor. When the soot is accumulated, the engine ECU performs post-injection to increase the exhaust gas temperature and burns the collected PM at approx. 600°C.

1) Oxidation of DOC

The DOC oxidizes HC and CO of the exhaust gas in the two-way catalytic converter at 180℃ or more, and performs best at the temperature between 400 and 500℃. The front EGT sensor detects whether the DOC can burn (oxidize) the post-injected fuel or not, and sends the signal to the ECU to maintain the DOC operating temperature between 300 and 500℃. The DOC reduces CO and HC of the exhaust gas by redox reaction and also reduces small amount of PM.

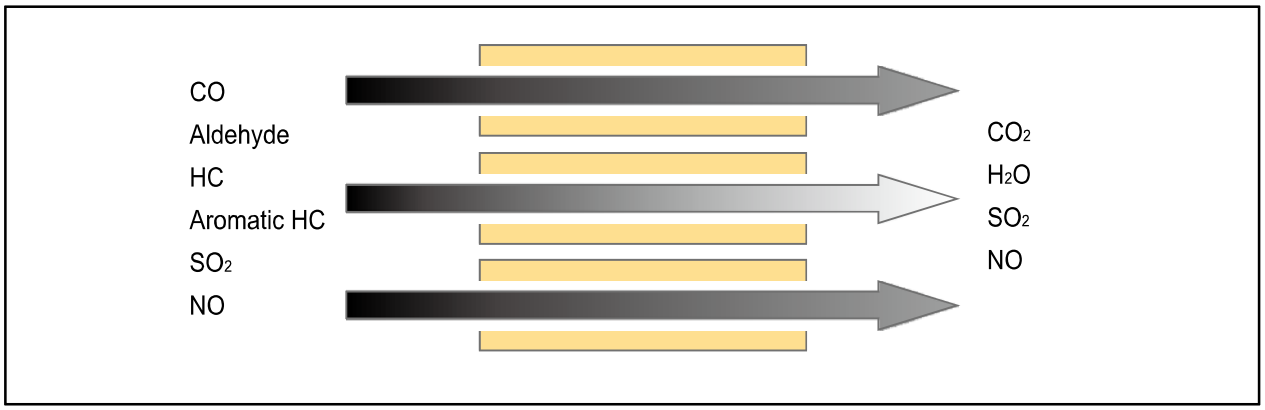

1. Oxygen adheres to the catalyst materials: Less than 180℃

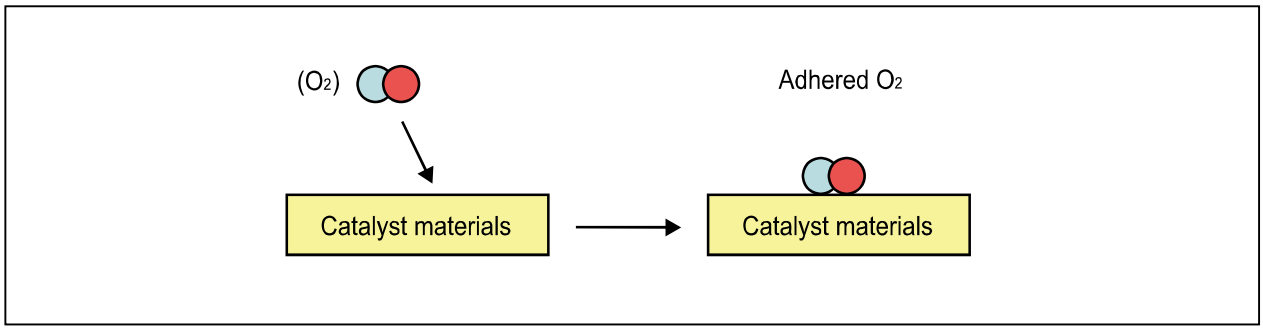

2. CO and HC are oxidized by the catalyst materials: More than 180℃

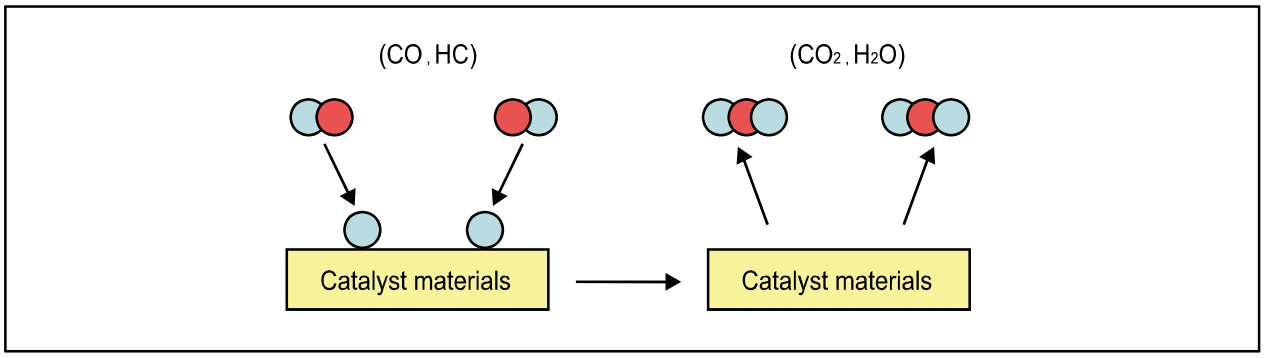

Modification basis	
Application basis	
Affected VIN	

2) Collecting PM of DPF

There is a filter installed in the DPF and the PM filtered by this filter is burned (regeneration) when the temperature of exhaust gas is increased due to post-injection. The filter has a honeycomb-like structure to capture the particulate matter and the inlet and outlet of each channel are closed alternatively. Once the exhaust gas enters to the inlet of a channel, it is released from the outlet of the adjacent channel through the porous wall because of the closed outlet of the first channel, and the PM is collected in the first channel.

[Collecting PM of CDPF]

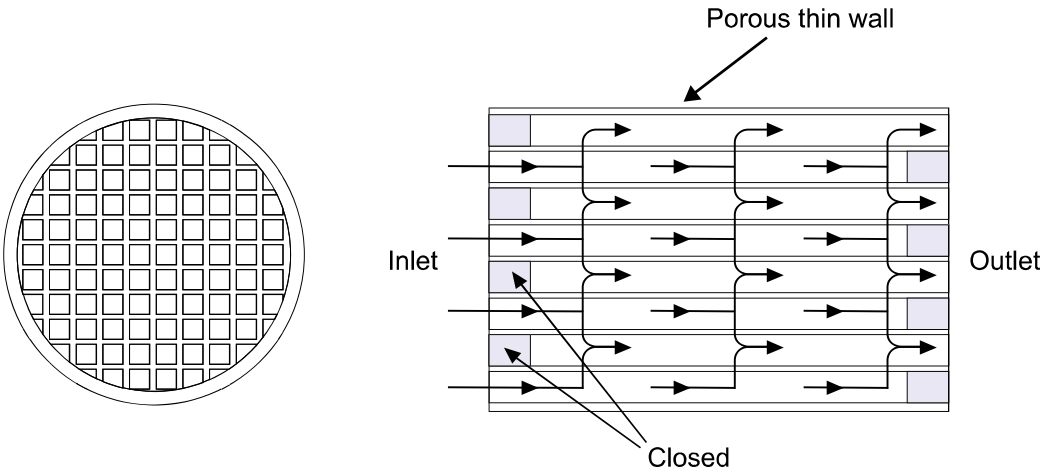

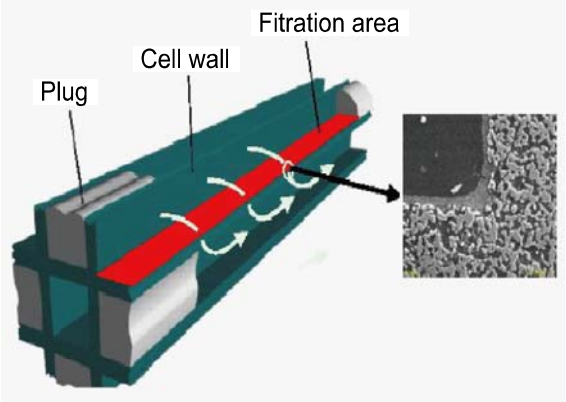

NOTE

Normally, when the driving distance becomes approx. 600 to 1,200 km, enough amount of soot to be burned is filtered and accumulated in the CDPF. The ECU increases the amount of fuel post-injection to increase the temperature of the exhaust gas up to 600°C, so that the soot is burned. The soot is burned for 15 to 20 minutes (may differ by conditions).

Modification basis	
Application basis	
Affected VIN	

3) PM Regeneration of DPF

The differential pressure sensor installed in the DPF measures the pressure values of inlet and outlet of CDPF. And the amount of the PM collected in the filter is calculated based on the exhaust temperature, intake air mass flow, booster pressure, etc.
The regeneration is started when the amount of the collected PM is 28 g or more.
The ECU commands post-injection to increase the temperature of CDPF to 600℃.

1. When the amount of the collected PM is not enough: The DPF works as a filter.

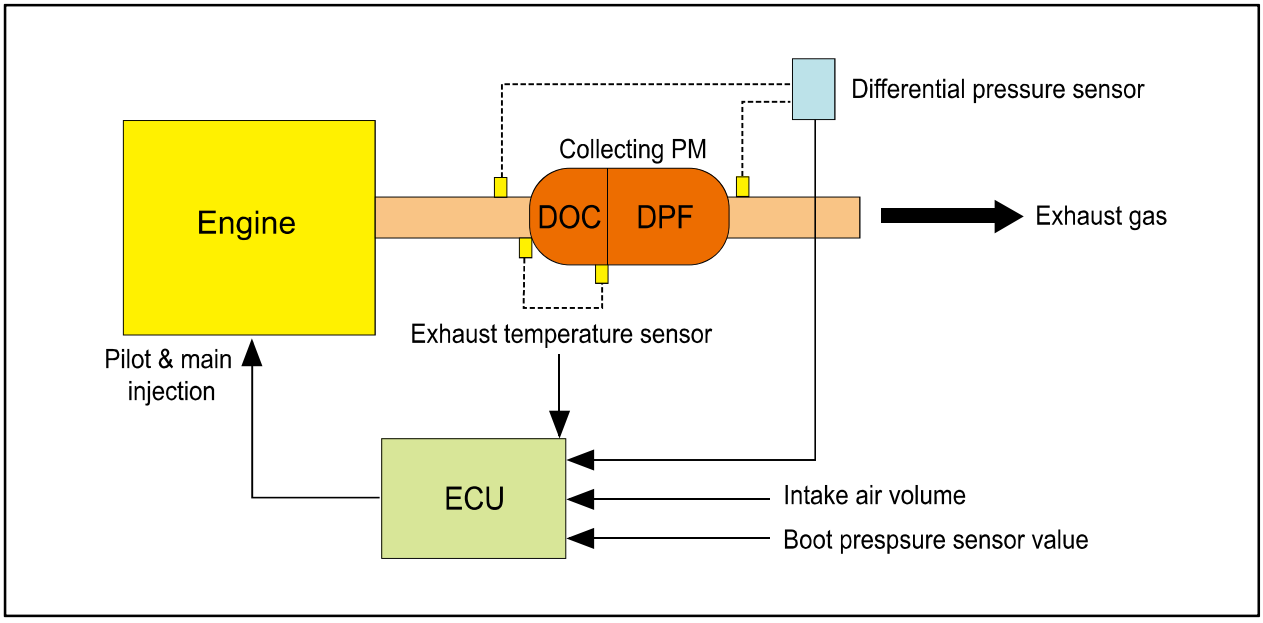

2. When enough amount of PM is collected: The ECU commands post-injection and increase the exhaust gas temperature to start regeneration.

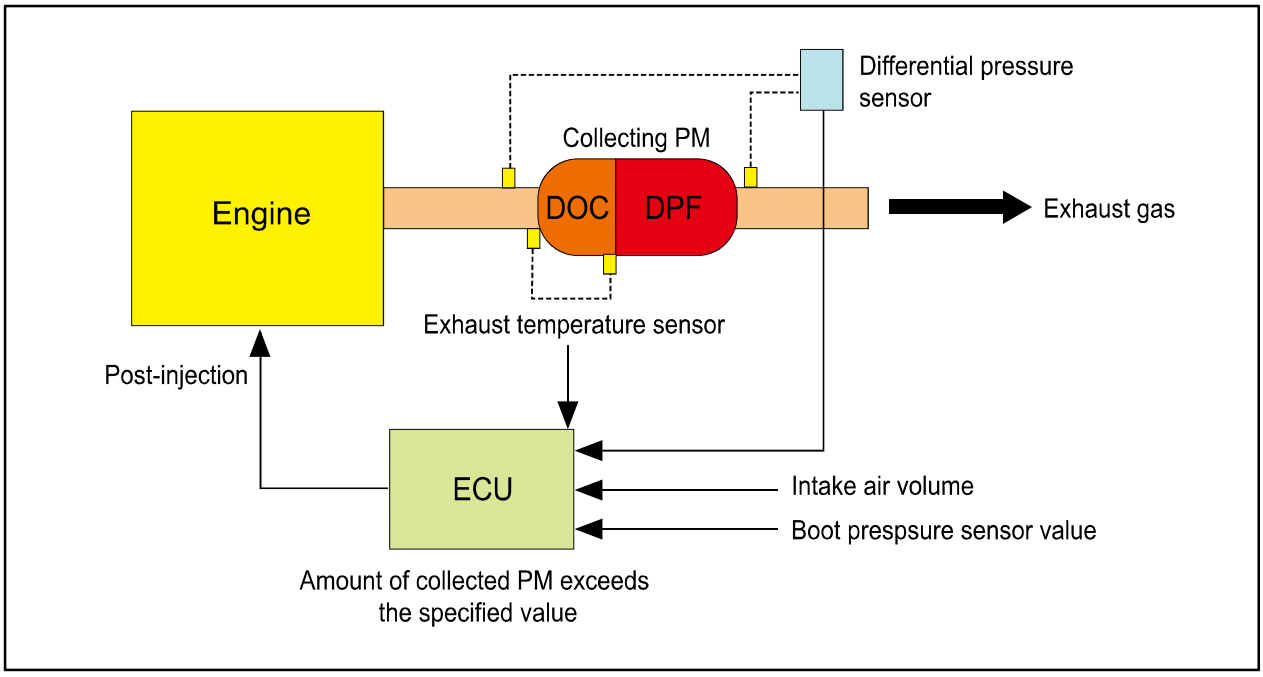

Modification basis	
Application basis	
Affected VIN	

4) Fuel Injection During CDPF Regeneration

The injection method in D20DTR engine has three steps;
Pilot injection, Main injection, Post injection

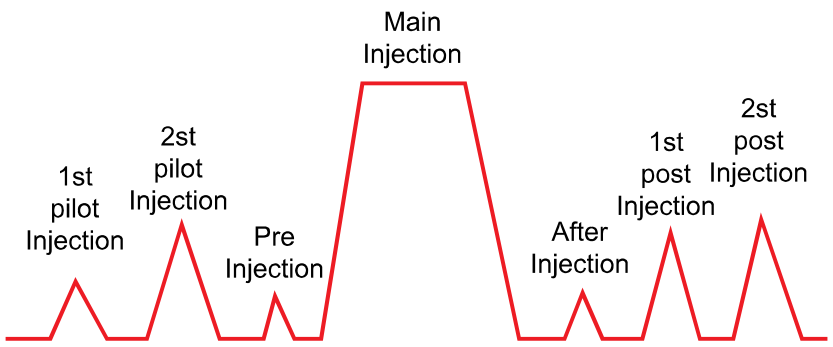

Injection	Effect
Pilot injection	Decrease of PM by fuel mixture Decrease of noise from engine combustion
Pre-injection	Decrease of NOx by shortening main injection delay due to flammability Decrease of noise from engine combustion
Main injection	Main power source
Post-injection	Activation of CDPF by increasing exhaust gas temperature and supplying reduction material

▶Post injection

The post injection is the injection process after main injection and consists of 'After injection", "Post 1 injection" and "Post 2 injection". All of post injections are to reduce the PM and harmful exhaust gas. The post injection does not make the actual output. The post injection activates the fuel by injecting the fuel to the incompletely combusted gas after primary combustion. Through the process, the PM and smoke in the exhaust gas could be reduced. There are totally 7 injections as shown in the figure. However, all of 7 injections are not performed during driving because it decreases the fuel economy. Totally 5 injections can be performed in one cycle.

6. CIRCUIT DIAGRAM

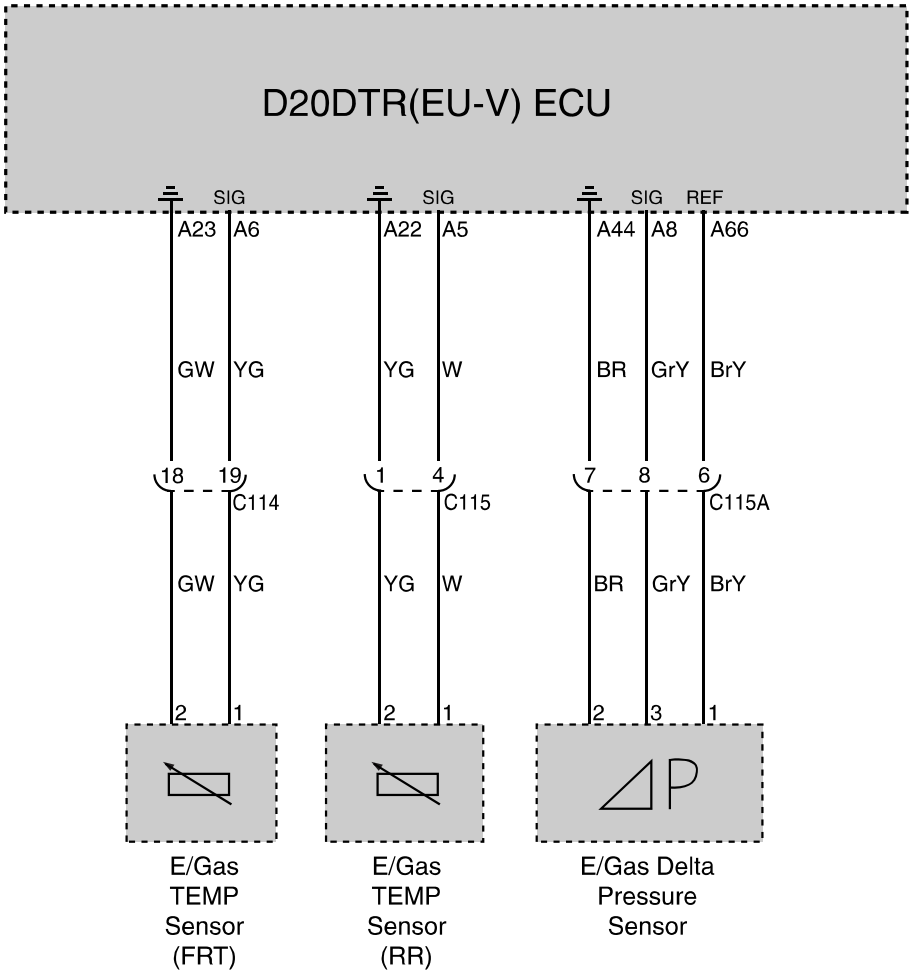

Modification basis	
Application basis	
Affected VIN	